THE BUILDING RESEARCH INSTITUTE (INSTYTUT TECHNIKI BUDOWLANEJ)
PL 00-611 WARSAW, ul. Filtrowa 1, www.itb.pl

Member of EOTA and UEAtc

NATIONAL TECHNICAL ASSESSMENT ITB-KOT-2020/1504 Revision 2

This National Technical Assessment has been issued in accordance with the regulation of the Minister of Infrastructure and Construction of 17 November 2016 on National Technical Assessments (Journal of Laws of 2016, item 1968) by Instytut Techniki Budowlanej in Warsaw, at the request of:

CAPRICORN S.A.
Ciernie 11, 58-160 Świebodzice

The National Technical Assessment ITB-KOT-2020/1504 Revision 2 constitutes a positive assessment of the performance of the following construction products for the intended use:

Bathroom inlets
Aqua Ambient Super, Aqua Ambient and Aqua Ambient Black Line

Date of expiry of the National Technical Assessment:

1 June 2026

DIRECTOR
the Building Research Institute
(ITB)

dr inż. (PhD Eng.) Robert Geryło

Warsaw, 1 June 2021

The National Technical Assessment ITB-KOT-2020/1504 Revision 2 contains 29 pages, including 2 Appendices. National Technical Assessment ITB-KOT-2020/1504 revision 2 replaces National Technical Assessment ITB-KOT-2020/1504 revision 1.

Building Research Institute

ul. Filtrowa 1, 00-611 Warsaw

Tel. 22 825 04 71; NIP (Tax Identification Number): 525 000 93 58; KRS (National Court Register No.): 0000158785

1. TECHNICAL DESCRIPTION OF THE PRODUCT

The subject of this National Technical Assessment are Aqua Ambient Super, Aqua Ambient and Aqua Ambient Black Line drain bathroom inlets manufactured in Poland by CAPRICORN S.A., Ciernie 11, 58-160 Świebodzice.

This National Technical Assessment covers the following product types:

- Aqua Ambient Super DN 40 point inlets with siphon, side outlet and ARCO, SPOT, CUBE or ORIENT grate, acc. to fig. B1, B4 and B5,
- Aqua Ambient Super DN 40 point inlets with siphon, side inlet and outlet and ARCO, SPOT, CUBE or ORIENT grate, acc. to fig. B2, B4 and B5,
- Aqua Ambient Super DN 50 point inlets with siphon, side inlet and outlet and ARCO, SPOT, CUBE or ORIENT grate, acc. to fig. B3, B4 and B5,
- Aqua Ambient DN 40 linear inlets with low siphon, side outlet and ARCO, SPOT, CUBE, ORIENT, PLAIN, MOROCCO or MODERN grate, acc. to fig. B6, B8, B11 - B17,
- Aqua Ambient Black Line DN 40 linear inlets with low siphon, side outlet and ARCO, SPOT, CUBE, ORIENT, PLAIN, MOROCCO or MODERN grate, acc. to fig. B6, B8, B11 - B17,
- Aqua Ambient DN 50 linear inlets with siphon, side outlet and ARCO, SPOT, CUBE, ORIENT, PLAIN, MOROCCO or MODERN grate, acc. to fig. B7, B9 - B17,
- Aqua Ambient Black Line DN 50 linear inlets with siphon, side outlet and ARCO, SPOT, CUBE, ORIENT, PLAIN, MOROCCO or MODERN grate, acc. to fig. B7, B9 - B17.

The list of Aqua Ambient Super point inlets is shown in Table 1 and the list of Aqua Ambient and Aqua Ambient Black Line linear inlets — in Table 2.

Table 1

Item	Product name	Grate type	Product Symbol
1	2	3	4
Aqua Ambient Super point inlets			
1	Aqua Ambient Super DN 40 point inlet with siphon and side outlet	ARCO	9-2631-040-47-01
		SPOT	9-2632-040-47-01
		CUBE	9-2633-040-47-01
		ORIENT	9-2634-040-47-01
2	Aqua Ambient Super DN 40 point inlet with siphon, side inlet and outlet	ARCO	9-2631-040-48-01
		SPOT	9-2632-040-48-01
		CUBE	9-2633-040-48-01
		ORIENT	9-2634-040-48-01
3	Aqua Ambient Super DN 50 point inlet with siphon, side inlet and outlet	ARCO	9-2631-050-48-01
		SPOT	9-2632-050-48-01
		CUBE	9-2633-050-48-01
		ORIENT	9-2634-050-48-01

Table 2

Item	Product name	Inlet length after installation, mm	Grate type	Product Symbol
1	2	3	4	5
Aqua Ambient linear inlets				
1	Aqua Ambient DN 40 linear inlet with low siphon and side drainage	600	ARCO, SPOT, CUBE, ORIENT, PLAIN, MOROCCO, MODERN	9-2910-600-30-24-12
		700		9-2910-700-30-24-12
		800		9-2910-800-30-24-12
		900		9-2910-900-30-24-12
		1000		9-2910-000-30-24-12

Table 2 cont.

Item	Product name	Inlet length after installation, mm	Grate type	Product Symbol
1	2	3	4	5
Aqua Ambient linear inlets				
2	Aqua Ambient DN 50 linear inlet with siphon and side outlet	600	ARCO, SPOT, CUBE, ORIENT, PLAIN, MOROCCO, MODERN	9-2970-600-50-24-12
		700		9-2970-700-50-24-12
		800		9-2970-800-50-24-12
		900		9-2970-900-50-24-12
		1000		9-2970-000-50-24-12
Aqua Ambient Black Line linear inlets				
3	Aqua Ambient Black Line DN 40 linear inlet with siphon and side outlet	600	ARCO, SPOT, CUBE, ORIENT, PLAIN, MOROCCO, MODERN	9-2910-600-30-35-10
		700		9-2910-700-30-35-10
		800		9-2910-800-30-35-10
		900		9-2910-900-30-35-10
		1000		9-2910-000-30-35-10
4	Aqua Ambient Black Line DN 50 linear inlet with siphon and side outlet	600	ARCO, SPOT, CUBE, ORIENT, PLAIN, MOROCCO, MODERN	9-2970-600-30-35-10
		700		9-2970-700-30-35-10
		800		9-2970-800-30-35-10
		900		9-2970-900-30-35-10
		1000		9-2970-000-30-35-10

Components of Aqua Ambient Super spot inlets, and Aqua Ambient DN 40 and Aqua Ambient Black Line DN 40 linear inlets are made of polypropylene (PP) and corrosion-resistant steel, whereas components of Aqua Ambient DN 50 and Aqua Ambient Black Line DN 50 linear inlets are made of polypropylene (PP), acrylonitrile-butadiene-styrene copolymer (ABS) and corrosion-resistant steel. The elements of the Aqua Ambient Black Line linear inlets made of stainless steel are coated with dry powder lacquer with a thickness of not less than 80 pm. The inlet elements covered by this National Technical Assessment are sealed with NBR, FKM, or PU seals.

The grates of the point and linear inlets have apertures of various shapes and positions on the grate surface allowing for wastewater drainage. The linear inlets can be equipped with PLAIN full grate without apertures. In linear inlets with a full grate, wastewater is drained through a 3.0 * 3.5 mm wide slot, located between the grate and the drainage gutter of the gutter around the entire perimeter of the grate. Linear inlets are equipped with supports enabling adjustment of the inlet upper surface height, depending on the place of installation.

The shape and design of the products covered by this National Technical Assessment are presented in Appendix B. The technical description of materials and components of which the Aqua Ambient Super, Aqua Ambient and Aqua Ambient Black Line drain inlets are made, as well as their dimensions, external appearance and designation are presented in Appendix A.

2. INTENDED APPLICATION OF THE PRODUCT

The Aqua Ambient Super, Aqua Ambient and Aqua Ambient Black Line bathroom inlets are intended for drainage of domestic wastewater from floor surfaces of wet rooms in the range resulting from the performance set out in point 3.

The design of Aqua Ambient Super, Aqua Ambient and Aqua Ambient Black Line inlet bodies allows for installation in places where the installation height of the drain element is limited due to design or installation considerations.

Aqua Ambient Super, Aqua Ambient and Aqua Ambient Black Line drain inlets can be used in places intended for foot traffic exposed to loads not exceeding values corresponding to K 3 class according to standard PN-EN 1253-1:2015.

Connection elements used with Aqua Ambient Super, Aqua Ambient and Aqua Ambient Black Line inlets must enable connection to the sewage system according to standard PN-EN 12056-1:2002.

Products covered by this National Technical Assessment should be used in accordance with:

- the technical design, prepared for a specific facility, taking into account Polish standards and technical and construction regulations, in particular Regulation of the Minister of Infrastructure of 12 April 2002 on technical conditions to be met by buildings and their location (Journal of Laws Laws of 2019, item 1065, as amended),
- the requirements of this National Technical Assessment,
- instructions provided by the manufacturer for the customers.

3. PERFORMANCE CHARACTERISTICS OF THE PRODUCT AND THE METHODS OF ASSESSMENT

The performance of the Aqua Ambient Super point bathroom inlets and methods utilised for their assessment are presented in Table 3, whereas performance of the Aqua Ambient and Aqua Ambient Black Line linear bathroom inlets and methods utilised for their assessment — in Table 4.

Table 3

Item	Basic characteristics	Performance	Assessment methods
1	2	3	4
1	Water seal depth of the inlets, mm	>50	PN-EN 1253-1:2015
2	Resistance of water seal to pressure, Pa	>400	PN-EN 1253-1:2015
3	Load resistance	K 3 class acc. to PN-EN 1253-1:2015 standard, item 4.7.1	PN-EN 1253-1:2015
4	Self-cleansing capacity	acc. to PN-EN 1253-1:2015 standard, item 4.2.2	PN-EN 1253-1:2015
5	Blockage prevention	acc. to PN-EN 1253-1:2015 standard, item 4.2.3	PN-EN 1253-1:2015
6	Temperature cycling	the inlets are resistant to intermittent effects of wastewater with a temperature in the range of (15 ± 10)°C to (93±2)°C	PN-EN 1253-1:2015
7	Odour-tightness	pressure drop of ≤ 20 Pa over at least 15 minutes	PN-EN 1253-1:2015
8	Body water tightness	no leaks under pressure of up to 10 kPa over a period of at least 15 minutes	PN-EN 1253-1:2015
9	Inlet flow rate, l/s: • at a head of water of 10 mm: - DN 40 - DN 50 • at a head of water of 20 mm: - DN 40 - DN50	 > 0.2 >0.3 >0.2 > 0.4	PN-EN 1253-1:2015

Table 4

Item	Basic characteristics	Performance	Assessment methods
1	2	3	4
1	Water seal depth of the inlets, mm	> 40	PN-EN 1253-1:2015
2	Resistance of water seal to pressure, Pa: - DN 40 - DN 50	 >400 >350	PN-EN 1253-1:2015
3	Load resistance	K 3 class acc. to PN-EN 1253-1:2015 standard, item 4.7.1	PN-EN 1253-1:2015
4	Self-cleansing capacity	acc. to PN-EN 1253-1:2015 standard, item 4.2.2	PN-EN 1253-1:2015
5	Blockage prevention	acc. to PN-EN 1253-1:2015 standard, item 4.2.3	PN-EN 1253-1:2015
6	Temperature cycling	the inlets are resistant to intermittent effects of wastewater with a temperature in the range of (15 ± 10)°C to (93±2)°C	PN-EN 1253-1:2015
7	Odour-tightness	pressure drop of ≤ 20 Pa over at least 15 minutes	PN-EN 1253-1:2015
8	Body water tightness	no leaks under pressure of up to 10 kPa over a period of at least 15 minutes	PN-EN 1253-1:2015
9	Inlet flow rate, l/s: • at a head of water of 10 mm: - DN 40 - DN 50 • at a head of water of 20 mm: - DN 40 - DN 50	 >0.5 >0.6 > 0.6 > 0.8	PN-EN 1253-1:2015
10 [1)]	Dry powder coating characteristics:		
	• thickness, pm	>80	PN-EN ISO 2808:2020
	• cross-cut adhesion, grade	0	PN-EN ISO 2409:2013
[1)] applies to Aqua Ambient Black Line floor drains			

4. PACKAGING, TRANSPORT, STORAGE AND PRODUCT MARKING METHODS

The products covered by this National Technical Assessment should be supplied in the manufacturer's original packaging, and stored and transported in a way that ensures that their performance remains unchanged.

The method of designating the product with a construction mark shall comply with Regulation of the Minister of Infrastructure and Construction of 17 November 2016 on the method of declaring the performance of construction products and methods of designating them with a construction mark (Journal of Laws of 2016, item 1966, as amended).

The product designation with a construction mark should be accompanied by:

- the last two digits of the year in which the construction label was first affixed to the construction product,
- the name and registered office address of the manufacturer or an identification mark that clearly indicates the name and registered office address of the manufacturer unambiguously,

- name and construction product type marking,
- the number and year of issue of the National Technical Assessment according to which the performance was declared (ITB-KOT-2020/1504 Revision 2),
- National Declaration of Performance number,
- the level or class of declared performance,
- manufacturers website address, if the National Declaration of Performance is published on that website.

A Safety Data Sheet and/or hazardous substances notice contained in a construction product referred to in Articles 31 or 33 of Regulation (EC) No. 1907/2006 of the European Parliament and of the Council concerning the Registration, Evaluation, Authorisation and Restriction of Chemicals (REACH) and establishing a European Chemicals Agency, should be provided or made available together with the National Declaration of Performance, as appropriate.

Furthermore, marking on a construction product constituting a hazardous mixture within the meaning of the REACH Regulation should comply with the requirements of Regulation (EC) No. 1272/2008 of the European Parliament and of the Council on Classification, Labelling and Packaging of Substances and Mixtures (CLP), amending and repealing Directives 67/548/EEC and 1999/45/EC, and amending Regulation (EC) No. 1907/2006.

5. ASSESSMENT AND VERIFICATION OF CONSTANCY OF PERFORMANCE

5.1. National system of assessment and verification of constancy of performance

In accordance with Regulation of the Minister of Infrastructure and Construction of 17 November 2016 on the method of declaring the performance of construction products and the method of designating them with a construction mark (Journal of Laws of 2016, item 1966, as amended), system 4 of assessment and verification of constancy of performance applies.

5.2. Type examination

The performance assessed in Section 3 constitute product type examination until any changes in raw materials, components, production line or plant are made.

5.3. Internal production control

The manufacturer should have an internal production control system implemented at the production plant. All system components, requirements and provisions used by the manufacturer should be systematically documented in a in the form of rules and procedures, including the records of performed tests. Internal production control should be adapted to the production technology and ensure that the declared performance of the product is maintained in serial production.

Internal production control includes specifications and raw material and component checks, control and test during production and control tests (according to item 5.4) performed by the manufacturer in accordance with the established test schedule and according to principles and procedures specified in the internal production control documentation.

Production control results should be systematically recorded. Register records should confirm that the products meet the criteria for assessment and verification of constancy of performance. Individual products or product batches and relevant production details should be fully identifiable and reproducible.

5.4. Control tests

5.4.1. Test program. The test program includes:

a) ongoing tests,
b) periodic tests.

5.4.2. Ongoing tests Ongoing tests include checking the following parameters:

a) dimensions,
b) external appearance,
c) marking.

5.4.3. Periodic tests. Periodic tests include checking the following parameters:

a) watertightness of the body,
b) thickness of the powder coating (in the case of Aqua Ambient Black Line drains).

5.5. Test frequency

Ongoing tests should be performed in accordance with the agreed test schedule, but in any case each batch of products must be tested. The size of a product batch should be specified in the internal production control documentation.

Periodic tests should be performed at least once every three years.

6. NOTICE

6.1. National Technical Assessment ITB-KOT-2020/1504 revision 2 replaces National Technical Assessment ITB-KOT-2020/1504 revision 1.

6.2. The National Technical Assessment ITB-KOT-2020/1504 Revision 2 is a positive assessment of the performance of those essential characteristics of Aqua Ambient Super, Aqua Ambient and Aqua Ambient Black Line bathroom drain inlets which, in accordance with the intended use resulting from the provisions of the Assessment, have an impact on the fulfilment of the basic requirements by the built structures in which the product will be used.

6.3. The National Technical Assessment ITB-KOT-2020/1504 Revision 2 is not an authorisation to designate a construction product with a construction mark.

According to Act of 16 April 2004 on construction products (Journal of Laws of 2020, item 215, as amended), the products covered by this National Technical Assessment may be marketed or made available on the national market, if the manufacturer has assessed and verified the constancy of performance, drawn up a National Declaration of Performance in accordance with the National Technical Assessment ITB-KOT-2020/1504 Revision 2 and designated the products with a construction mark in accordance with the applicable regulations.

6.4. The National Technical Assessment ITB-KOT-2020/1504 Revision 2 does not violate the rights resulting from the provisions on the protection of industrial property, in particular the Industrial Property Right Act of 30 June 2000 (Journal of Laws of 2021, item 324). Users of this National Technical Assessment of the Building Research Institute (ITB) are required to ensure compliance with those rights.

6.5. By issuing this National Technical Assessment, the Building Research Institute (ITB)

assumes no responsibility for infringements of any exclusive and acquired rights.

6.6. The National Technical Assessment does not release the manufacturer of the products from responsibility for ensuring proper product quality, and the contractors from responsibility for their proper use.

6.7. The validity of this National Technical Assessment may be extended for further periods of no more than 5 years.

7. LIST OF DOCUMENTS USED IN THE PROCEDURE

7.1. Reports, test reports, assessments, classifications

1) Specialist opinion no. 1761/21/Z00NZF concerning the assessment of tests in respect of Aqua Ambient Super, Aqua Ambient and Aqua Ambient Black Line bathroom floor drains for the purposes of a National Technical Assessment, Department of Heat Physics, Acoustics and Environment of the Building Research Institute, Warsaw, Poland
2) Research and Evaluation Report no. 54/21 in respect of Aqua Ambient 600, 700, 800, 900, 100 bathroom linear inlets with low siphon (Arco, Spot, Cube, Orient, Plain, Stone, Morroco, Modern), UNILAB S.C. Research Laboratory, Warsaw, Poland
3) Specialist opinion no. 2773/20/Z00NZF concerning the assessment of tests in respect of Aqua Ambient Super, Aqua Ambient and Aqua Ambient Black Line bathroom floor drains for the purposes of a National Technical Assessment, Department of Heat Physics, Acoustics and Environment of the Building Research Institute, Warsaw, Poland
4) Test report No. GT/253/2020 concerning load resistance of point and linear inlets, The Łukasiewicz Research Network – Institute for Engineering of Polymer Materials and Dyes, ul. M. Skłodowskiej - Curie 55, 87-100 Toruń, Paint and Plastics Department, ul. Chorzowska 50 A, 44-100 Gliwice, Research and Analytical Plant
5) Test report No. GT/121/2020 concerning point and linear inlets, The Łukasiewicz Research Network – Institute for Engineering of Polymer Materials and Dyes, ul. M. Skłodowskiej - Curie 55, 87-100 Toruń, Paint and Plastics Department, ul. Chorzowska 50 A, 44-100 Gliwice, Research and Analytical Plant
6) Test report No. GT/198/2020 concerning inlets, The Łukasiewicz Research Network – Institute for Engineering of Polymer Materials and Dyes, ul. M. Skłodowskiej - Curie 55, 87-100 Toruń, Paint and Plastics Department, ul. Chorzowska 50 A, 44-100 Gliwice, Research and Analytical Plant

7) Test report No. GL.4131.17.2020 concerning dry powder lacquer coatings, The Łukasiewicz Research Network – Institute for Engineering of Polymer Materials and Dyes, ul. Chorzowska 50 A, 44-100 Gliwice
8) Test report No. 04/2020/WPUSTY concerning the appearance, dimensions and designation of Aqua Ambient inlets, Capricorn S.A. Laboratory
9) Coating adhesion test report of the Black Line linear inlet of 15/07/2020, Capricorn S.A. Laboratory
10) Test report No. T8/2013 concerning linear inlets, The Łukasiewicz Research Network – Institute for Engineering of Polymer Materials and Dyes, ul. M. Skłodowskiej - Curie 55, 87-100 Toruń, Paint and Plastics Department, ul. Chorzowska 50 A, 44-100 Gliwice, Research and Analytical Plant
11) Test report No. DF/T7/12 concerning 050 inlets (side and with side inlet) with ARCO, SPOT, ORIENT, CUBE grates, The Łukasiewicz Research Network – Institute for Engineering of Polymer Materials and Dyes, ul. M. Skłodowskiej - Curie 55, 87-100 Toruń, Paint and Plastics Department, ul. Chorzowska 50 A, 44-100 Gliwice, Research and Analytical Plant
12) Test report No. T4/2013 040 concerning drain bathroom inlets (floor) (side and through i.e., with inlet) with ARCO, SPOT, ORIENT, CUBE grates, The Łukasiewicz Research Network – Institute for Engineering of Polymer Materials and Dyes, ul. M. Skłodowskiej - Curie 55, 87-100 Toruń, Paint and Plastics Department, ul. Chorzowska 50 A, 44-100 Gliwice, Research and Analytical Plant

7.2. Related Standards and Documents

PN-EN 681-1:2002	*Elastomer seals - Material Requirements regarding connection gaskets for pipelines and drainage pipes. Part 1: Chewing gum*
PN-EN 681-2:2003	*Elastomer seals. Material requirements for pipe joint seals used in water and drainage applications. - Part 2: Thermoplastic elements*
PN-EN 1253-1:2015	*Floor gullies* in *buildings. Part 1: Trapped floor gullies with a depth water seal of at least 50 mm*
PN-EN 1451-1:2018 standard	*Plastics piping systems for soil and waste discharge (low and high temperature) within the building structure. Polypropylene (PP). Part 1: Specifications for pipes, fittings and the system*
PN-EN 10088-1:2014 standard	*Stainless steels. Part 1: List of stainless steels*
PN-EN 12056-1:2002 standard	*Gravity drainage systems inside buildings. Part 1: General provisions and requirements*
PN-EN 22768-1:1999 standard	*General Tolerances. Tolerances For Linear And Angular Dimensions Without Individual Tolerance Indications*
PN-EN ISO 2409:2013	*paints and varnishes. Cross-cut test*
PN-EN ISO 2808:2020	*paints and varnishes. Determination of film thickness*
ITB-KOT-2020/1504 Revision 1	*Aqua Ambient Super, Aqua Ambient and Aqua Ambient Black Line drain bathroom inlets*

APPENDICES

Appendix A.

A.1. Materials and components

Components of Aqua Ambient Super point inlets should be made of polypropylene and grade 1.4016 stainless steel according to PN-EN 10088-1:2014 standard.
Components of Aqua Ambient DN 40 and Aqua Ambient Black Line DN 40 linear inlets should be made from polypropylene (PP) and grade 1.4301 or 1.4307 corrosion-resistant steel, according to EN 10088-1:2014.
Components of Aqua Ambient and Aqua Ambient Black Line linear inlets should be made of polypropylene (PP), acrylonitrile butadiene styrene (ABS) copolymer and grade 1.4301 or 1.4307 stainless steel according to standard PN-EN 10088-1:2014.
Components of Aqua Ambient Black Line linear inlets made of stainless steel should be coated with dry powder varnish with a thickness of not less than 80 pm.
The elements of Aqua Ambient Super point inlets and Aqua Ambient and Aqua Ambient Black Line linear inlets should be sealed with NBR and FKM seals according to PN-EN 681-1:2002 standard or PU seals according to PN-EN 681-2:2003 standard.

A.2. Dimensions

Dimensions of Aqua Ambient Super, Aqua Ambient and Aqua Ambient Black Line inlets should conform to those specified in fig. B1 ÷ B17. Deviations of unspecified tolerances must conform to class *c* rough estimates according to EN 22768-1:1999 standard.
The connection ports dimensions should comply with PN-EN 1451-1:2018 standard.
The location of side wastewater inlets should comply with the requirements of PN-EN 1253-1:2015 standard, item 4.1.4.

A.3. External appearance

External and internal surfaces must be smooth, clean, free of scratches, blisters, dirt, pores and any other surface heterogeneities and defects that impede the functioning of the outlet. The protective coating on steel components should be continuous, well bonded to the substrate, free of peeling. Sharp edges should be blunted or rounded.

A.4. Marking

Sewage inlets shall bear durable and clear markings. The marks should contain at least the following information:
- manufacturer's mark or name, - connection dimensions.

Appendix B.

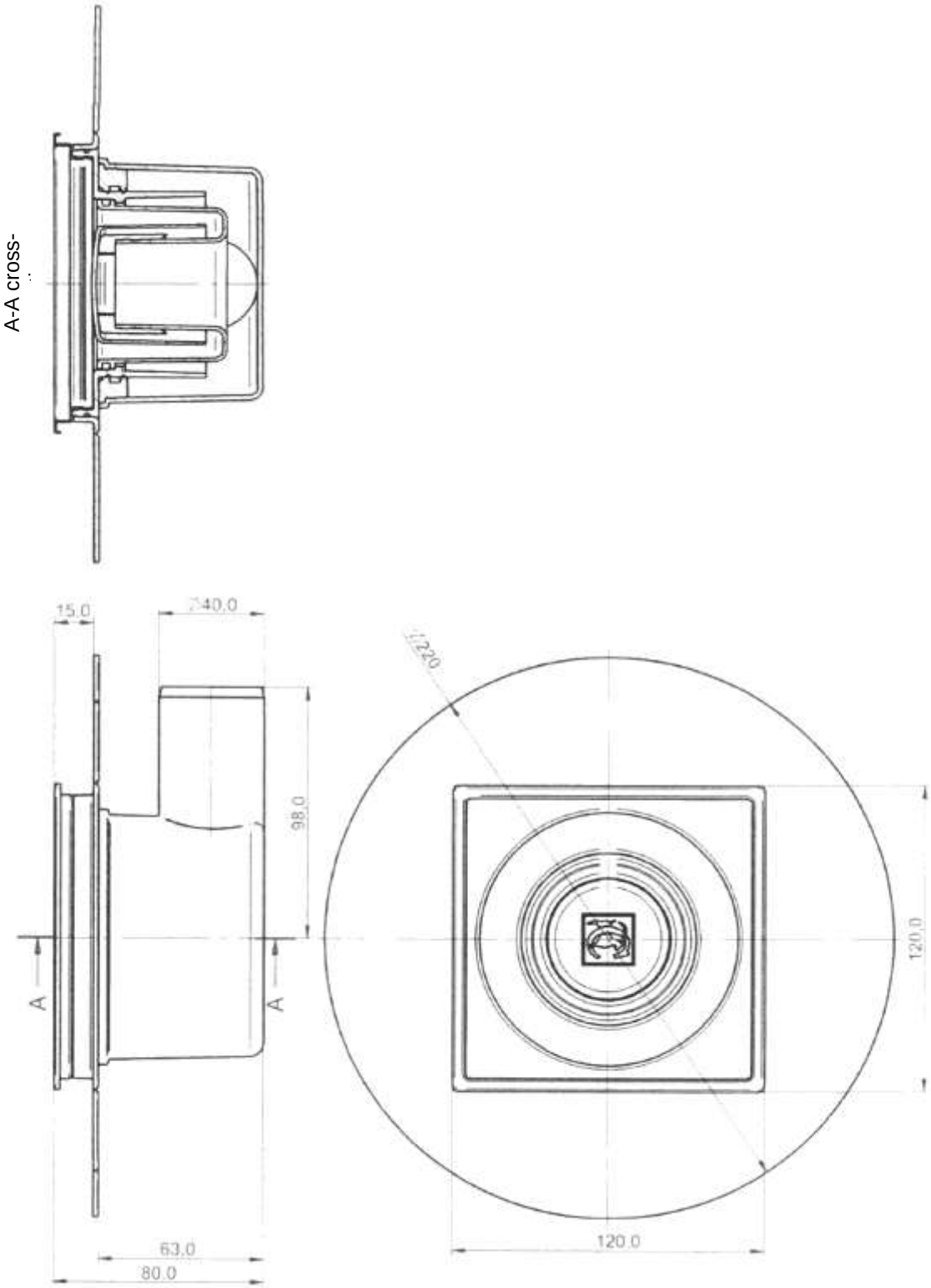

Fig. B1. Aqua Ambient Super DN 40 point inlets with siphon and side outlet

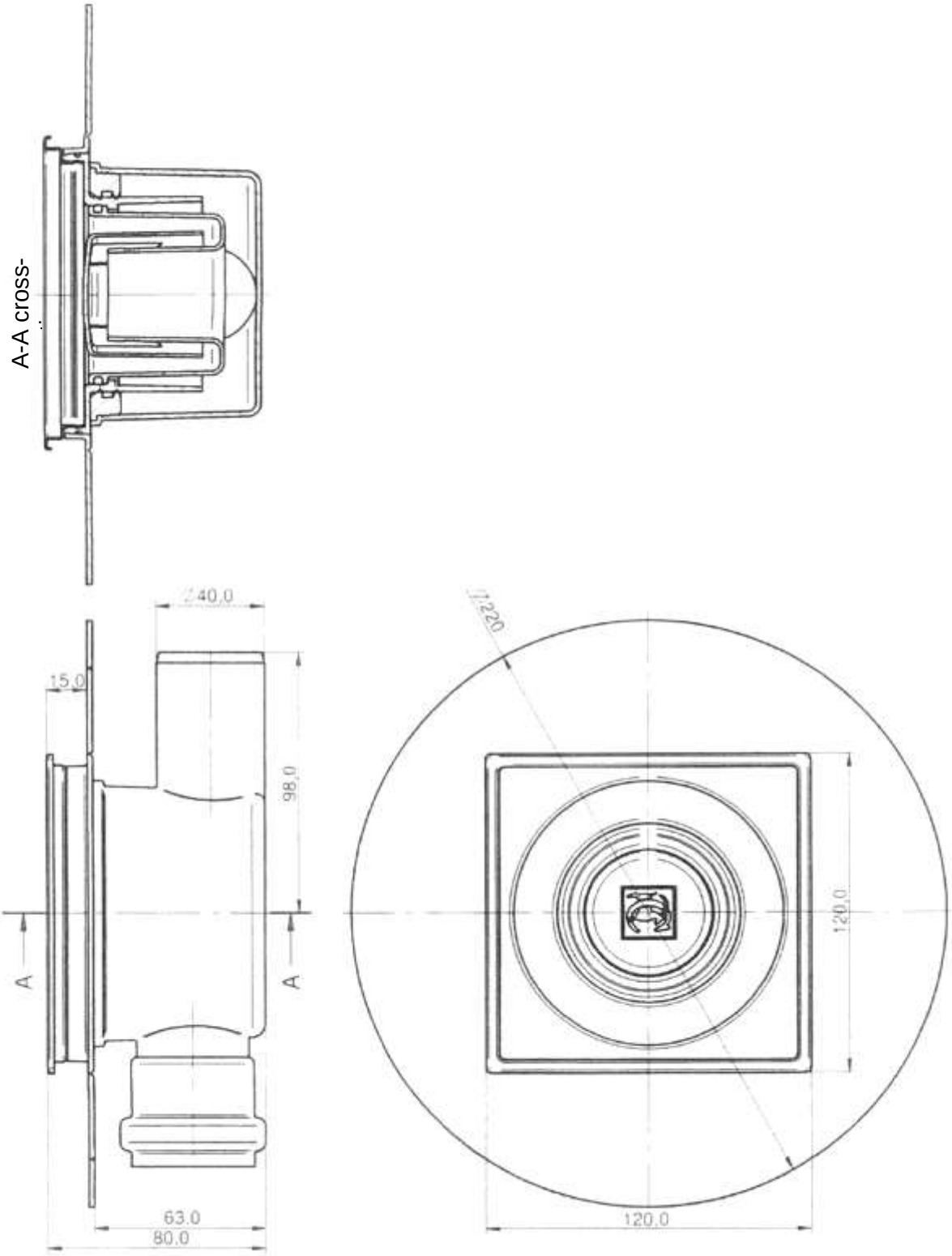

Fig. B2. Aqua Ambient Super DN 40 point inlets with siphon and side inlet and outlet

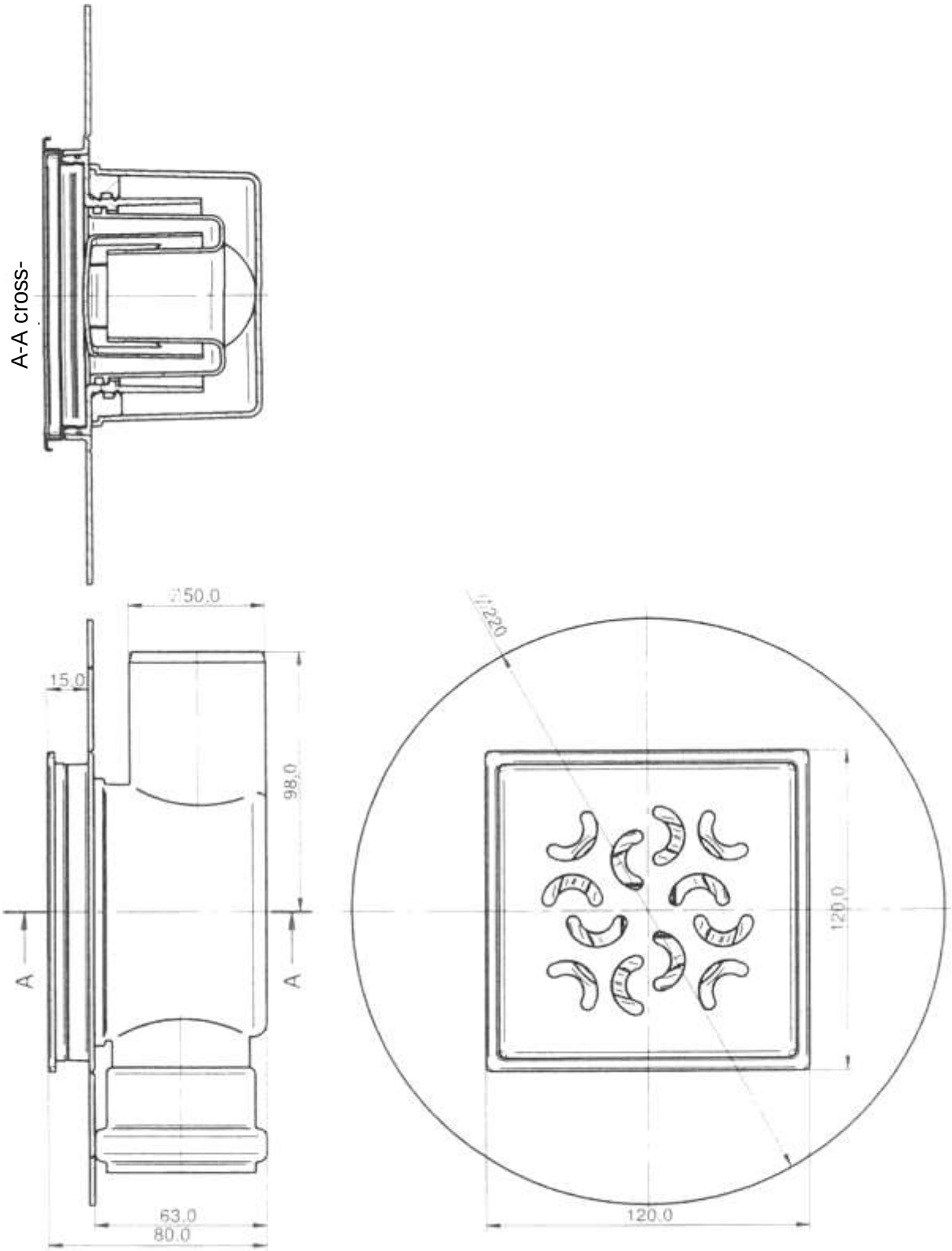

Fig. B3. Aqua Ambient Super DN 50 point inlets with siphon, side inlet and outlet

ARCO

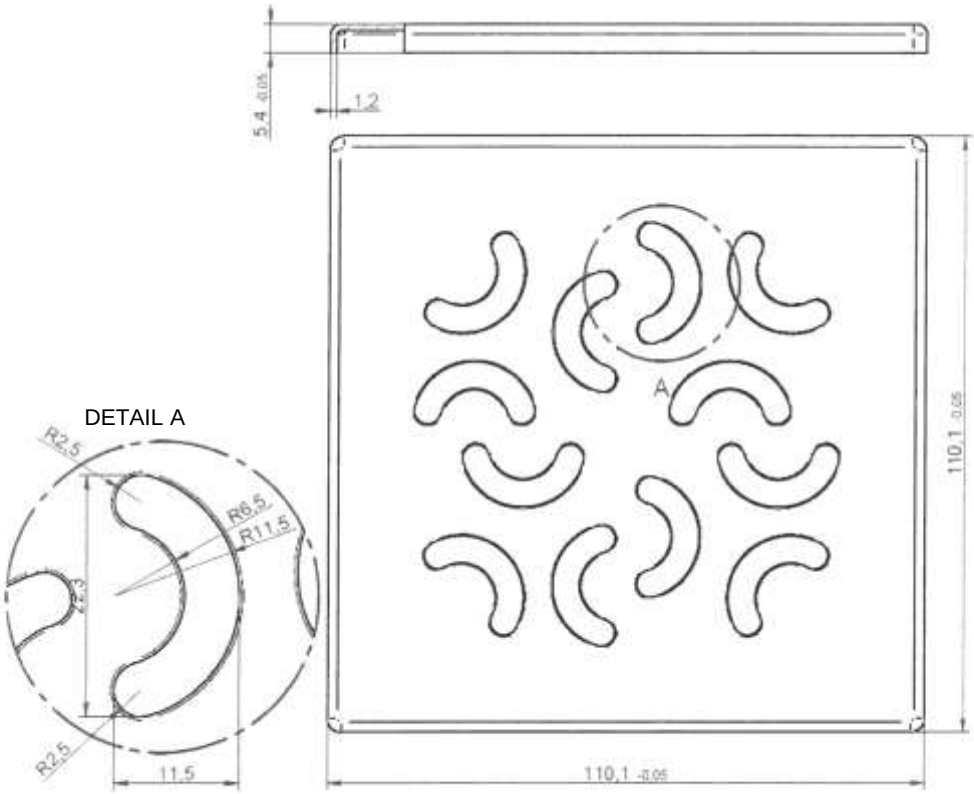

SPOT

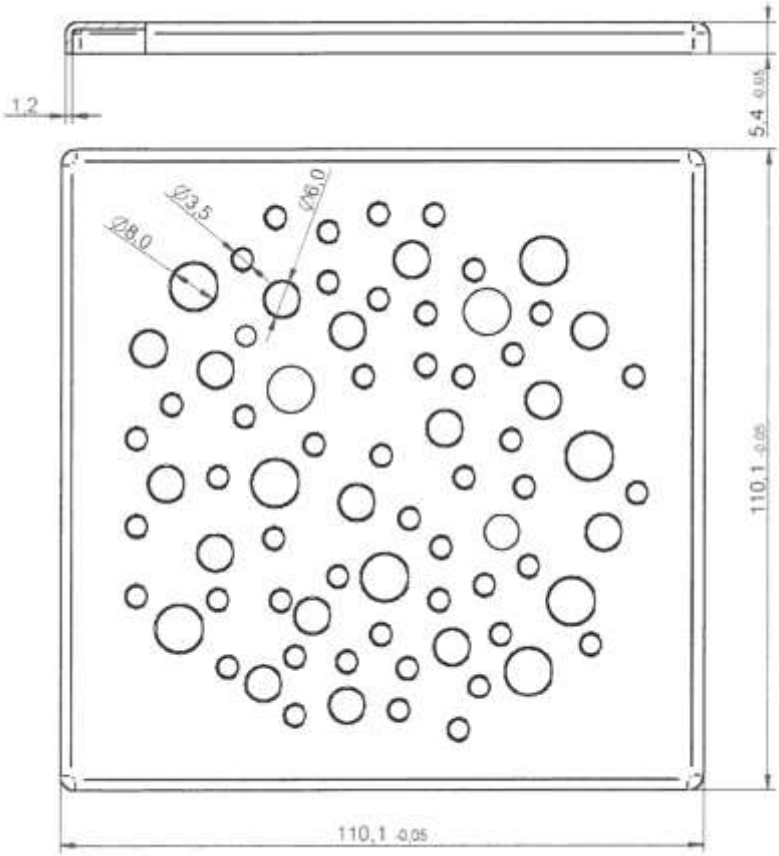

Fig. B4. Gratings for Aqua Ambient Super point inlets

CUBE

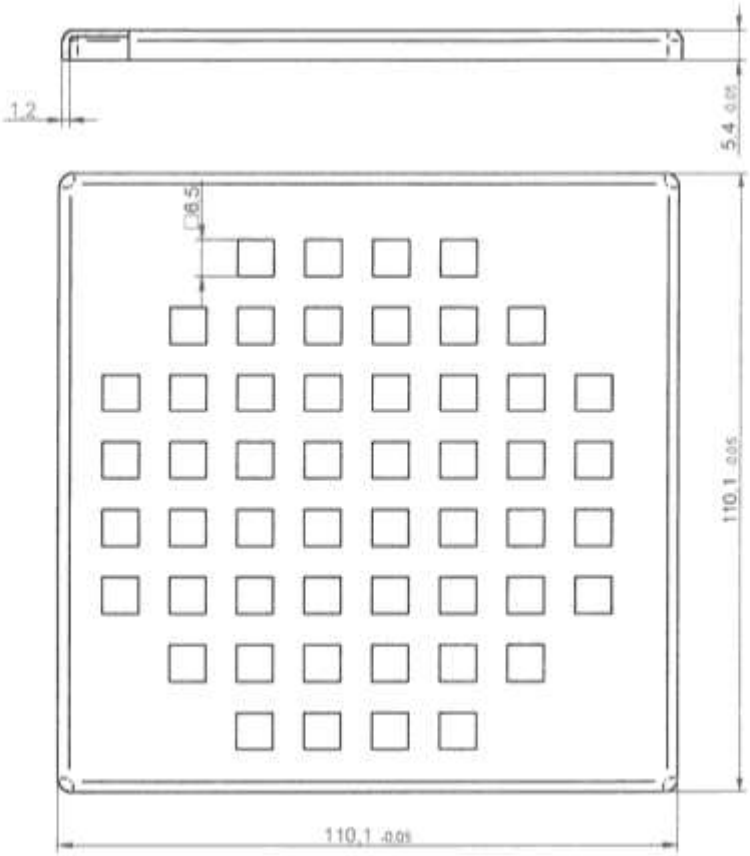

ORIENT

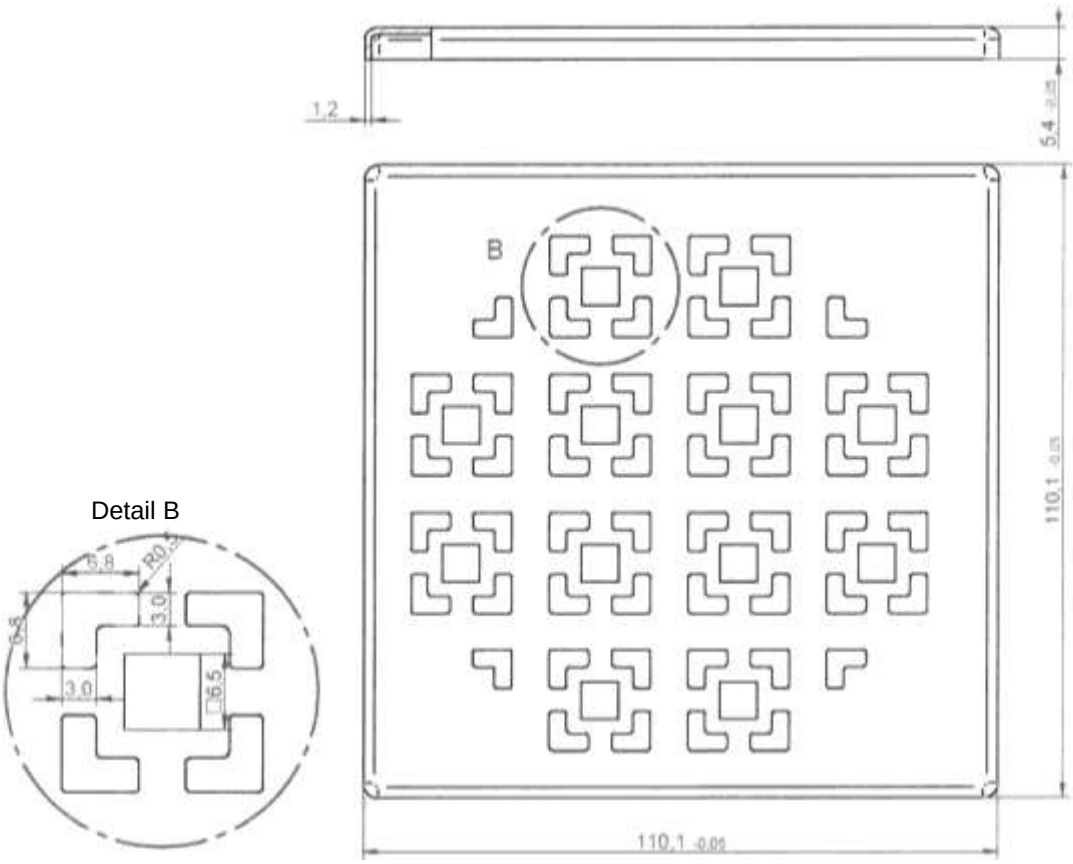

Fig. B5. Gratings for Aqua Ambient Super point inlets

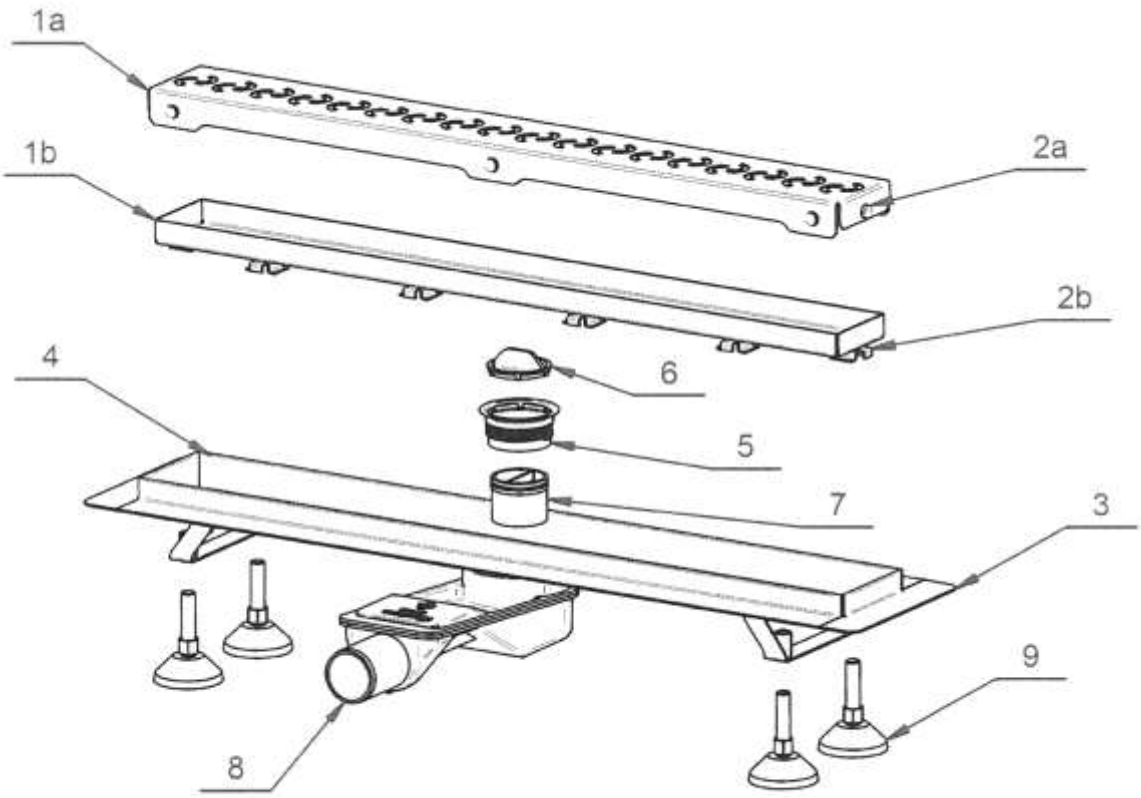

1a	-	Grate with apertures	5	-	Siphon fastening nut
1b	-	Full grating	6	-	Knob
2a	-	Spacer	7	-	Siphon elements
2b	-	Positioning spacer	8	-	Siphon body
3	-	Flange	9	-	Supports
4	-	Drainage gutter			

Fig. B6. Aqua Ambient DN 40 linear inlets with low siphon and side outlet and Aqua Ambient Black Line DN 40 linear inlets with low siphon and side outlet — design

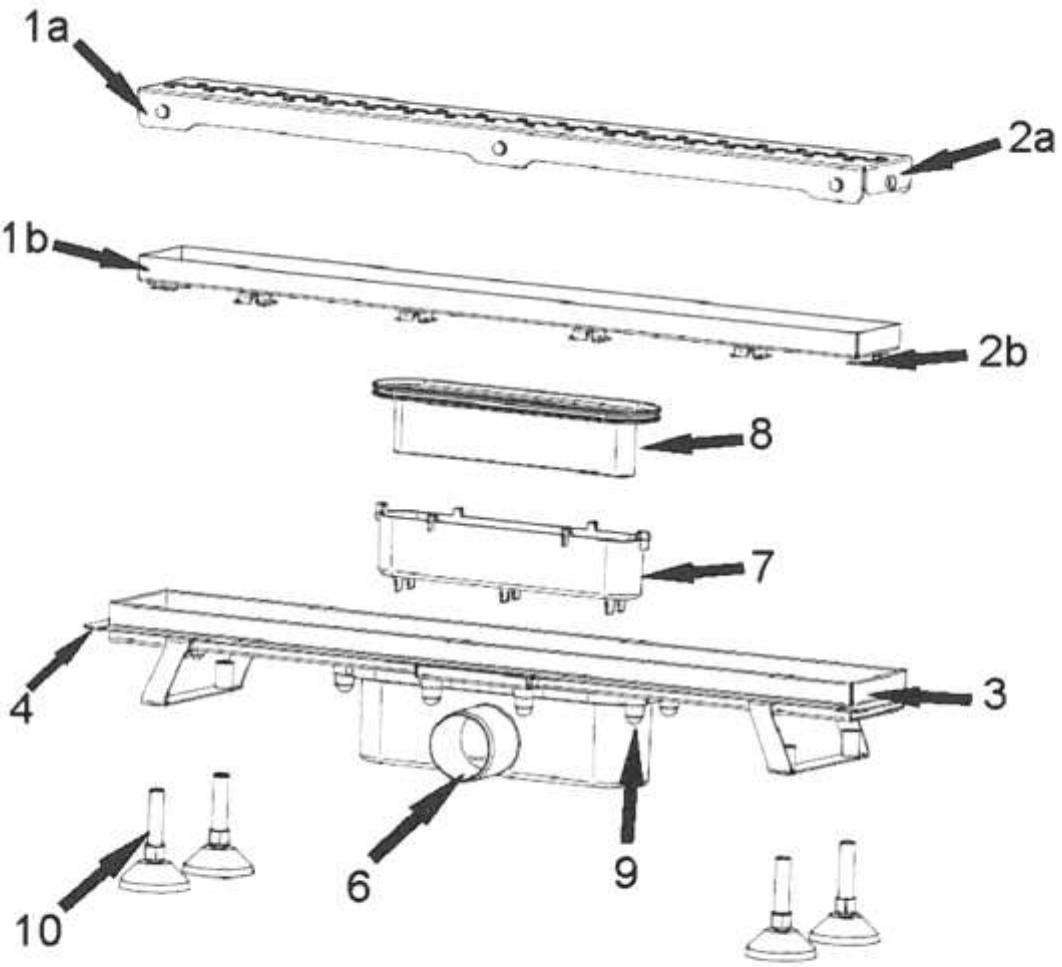

1a	-	Grille with holes	5	-	Siphon fastening nut
1b	-	Full grating	6	-	Knob
2a	-	Spacer	7	-	Siphon elements
2b	-	Positioning spacer	8	-	Siphon body
3	-	Flange	9	-	Supports
4	-	Drainage gutter			

Fig. B7. Aqua Ambient DN 50 linear inlets with siphon and side outlet and Aqua Ambient Black Line DN 50 linear inlets with siphon and side outlet — design

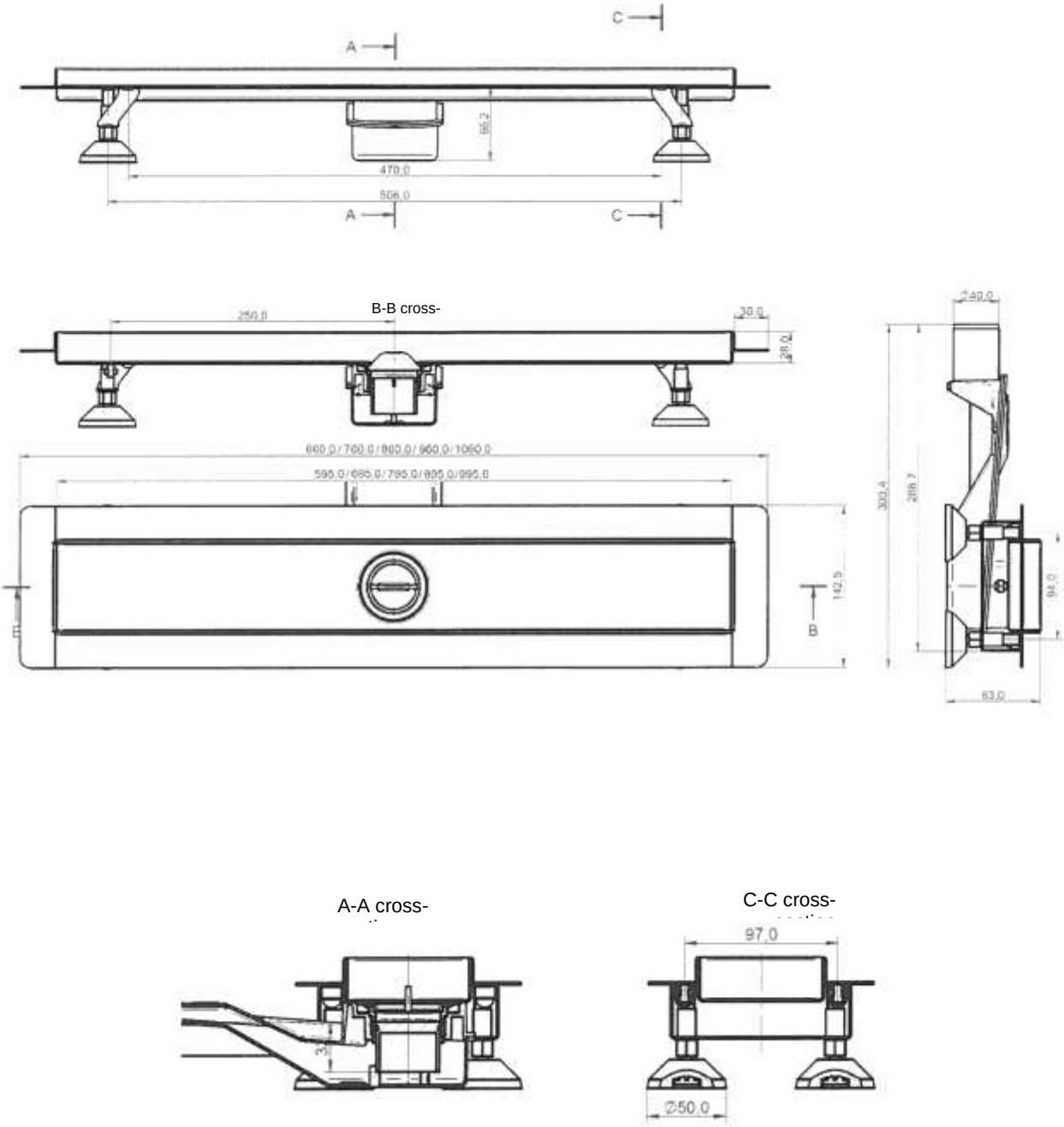

Fig. B8. Aqua Ambient DN 40 linear inlets with low siphon and side outlet and Aqua Ambient Black Line DN 40 linear inlets with low siphon and side outlet — dimensions

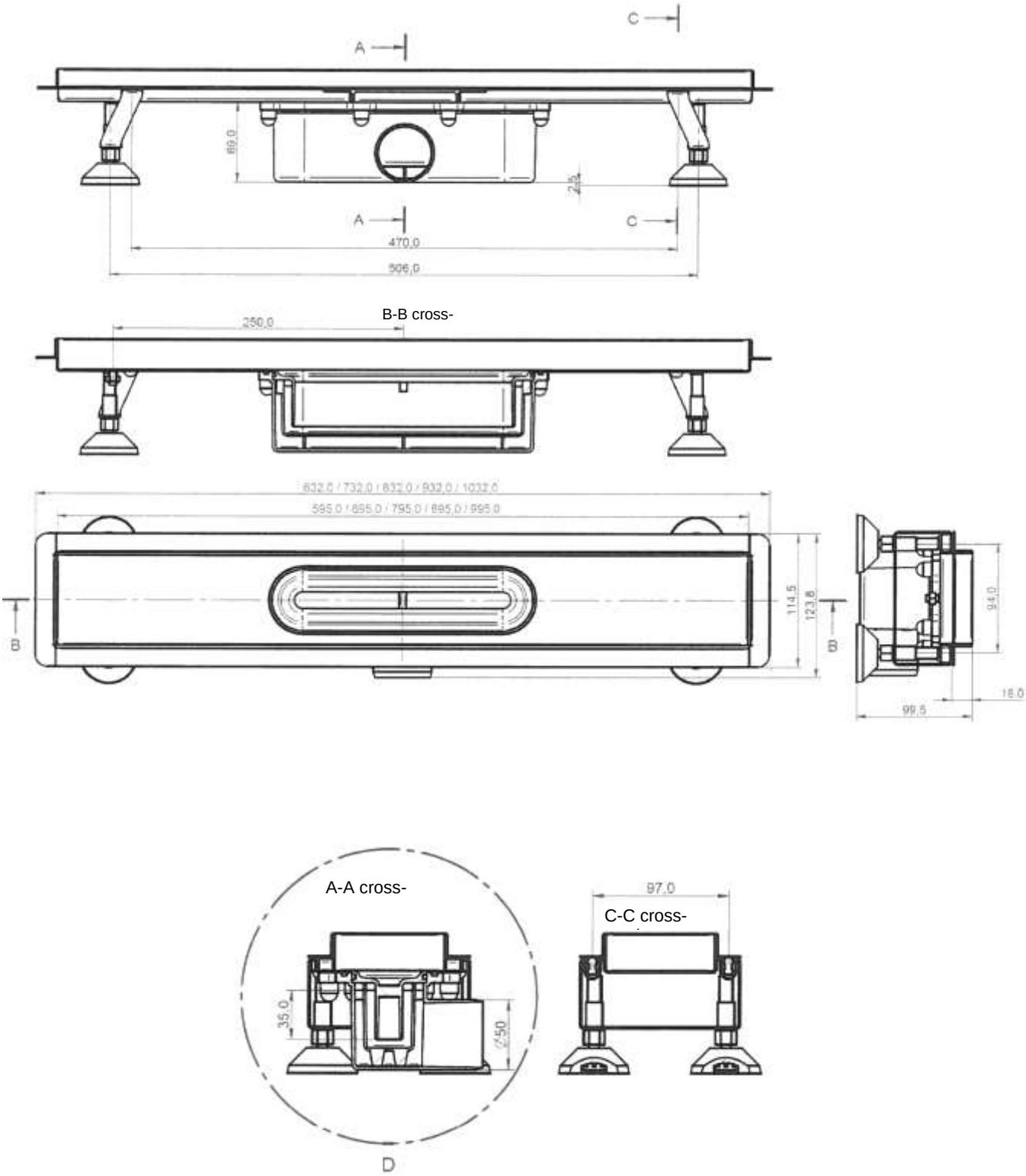

Fig. B9. Aqua Ambient DN 50 linear inlets with siphon and side outlet and Aqua Ambient Black Line DN 50 linear inlets with siphon, side outlet and narrow flange — dimensions

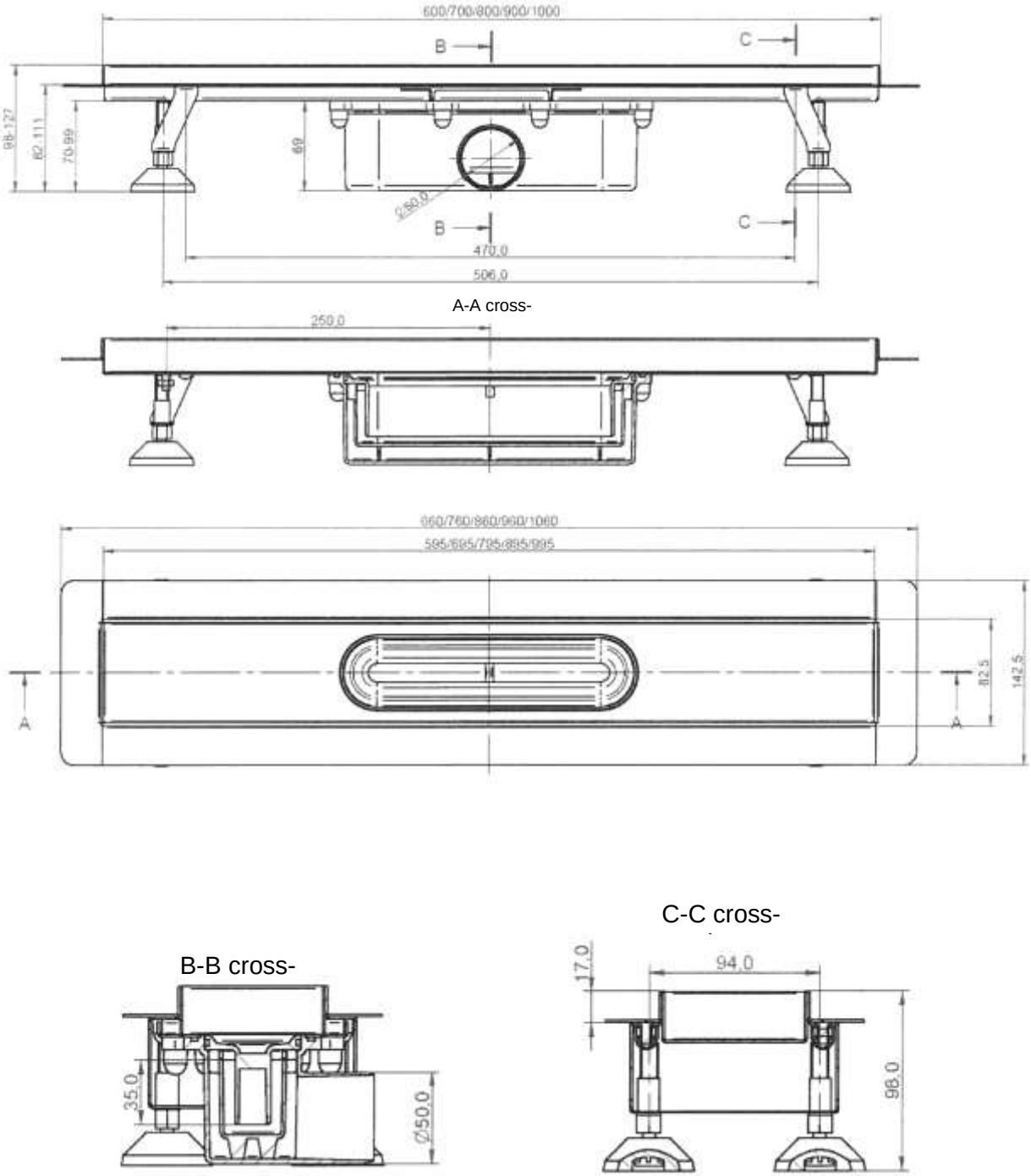

Fig. B10. Aqua Ambient DN 50 linear inlets with siphon and side outlet and Aqua Ambient Black Line DN 50 linear inlets with siphon, side outlet and wide flange — dimensions

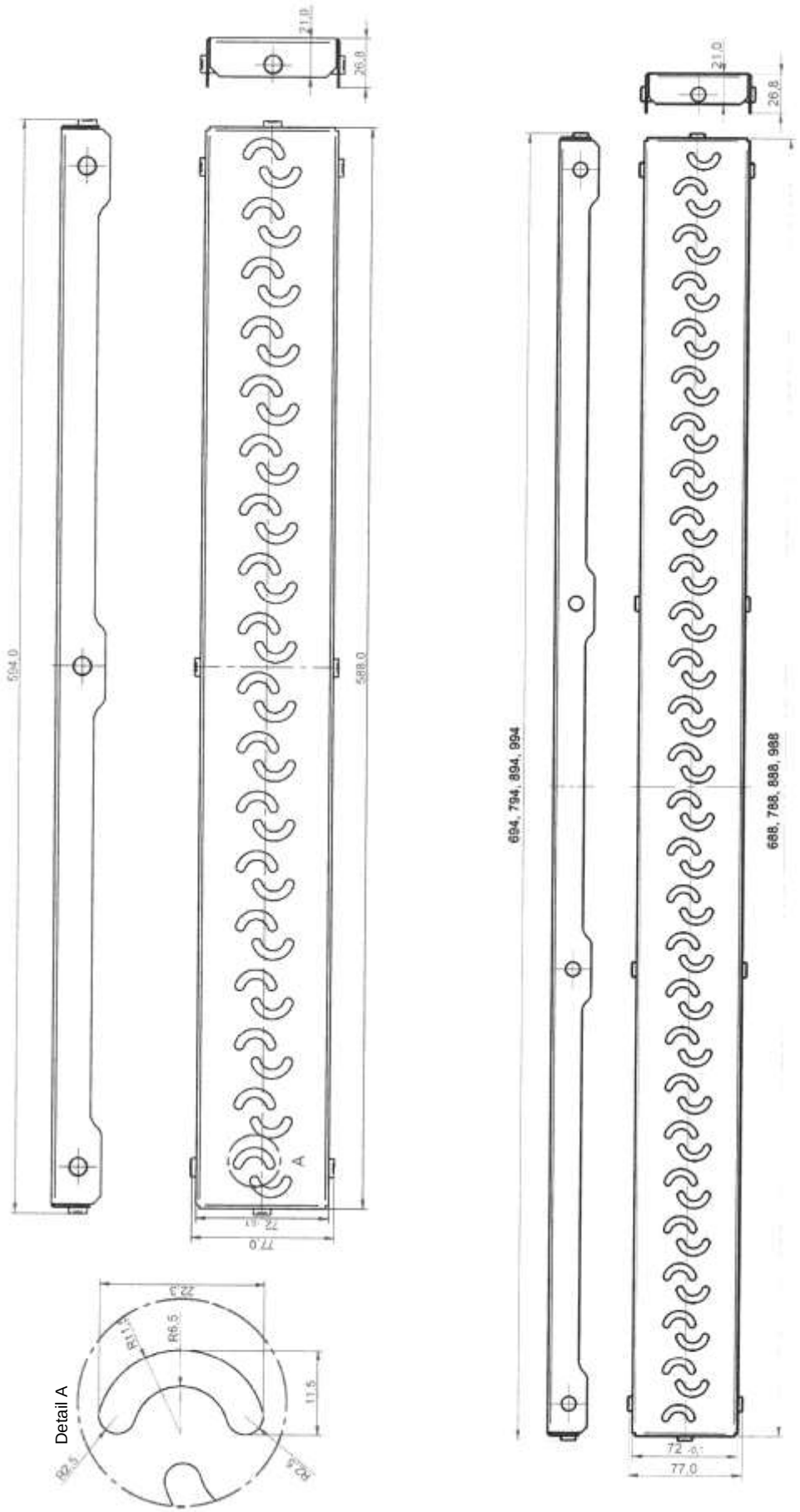

Fig. B11. ARCO grates for Aqua Ambient and Aqua Ambient Black Line linear inlets

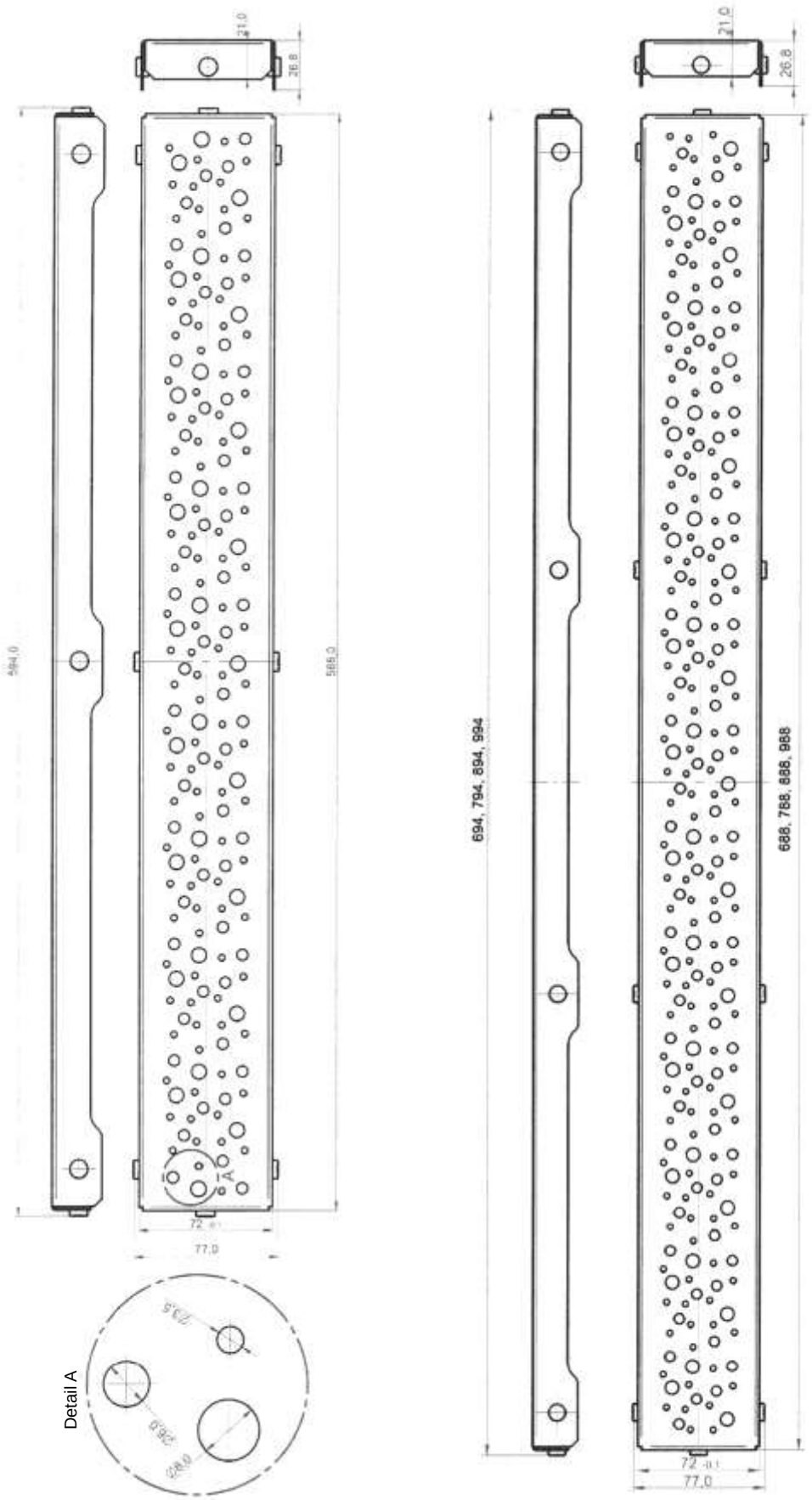

Fig. B12. SPOT grates for Aqua Ambient and Aqua Ambient Black Line linear inlets

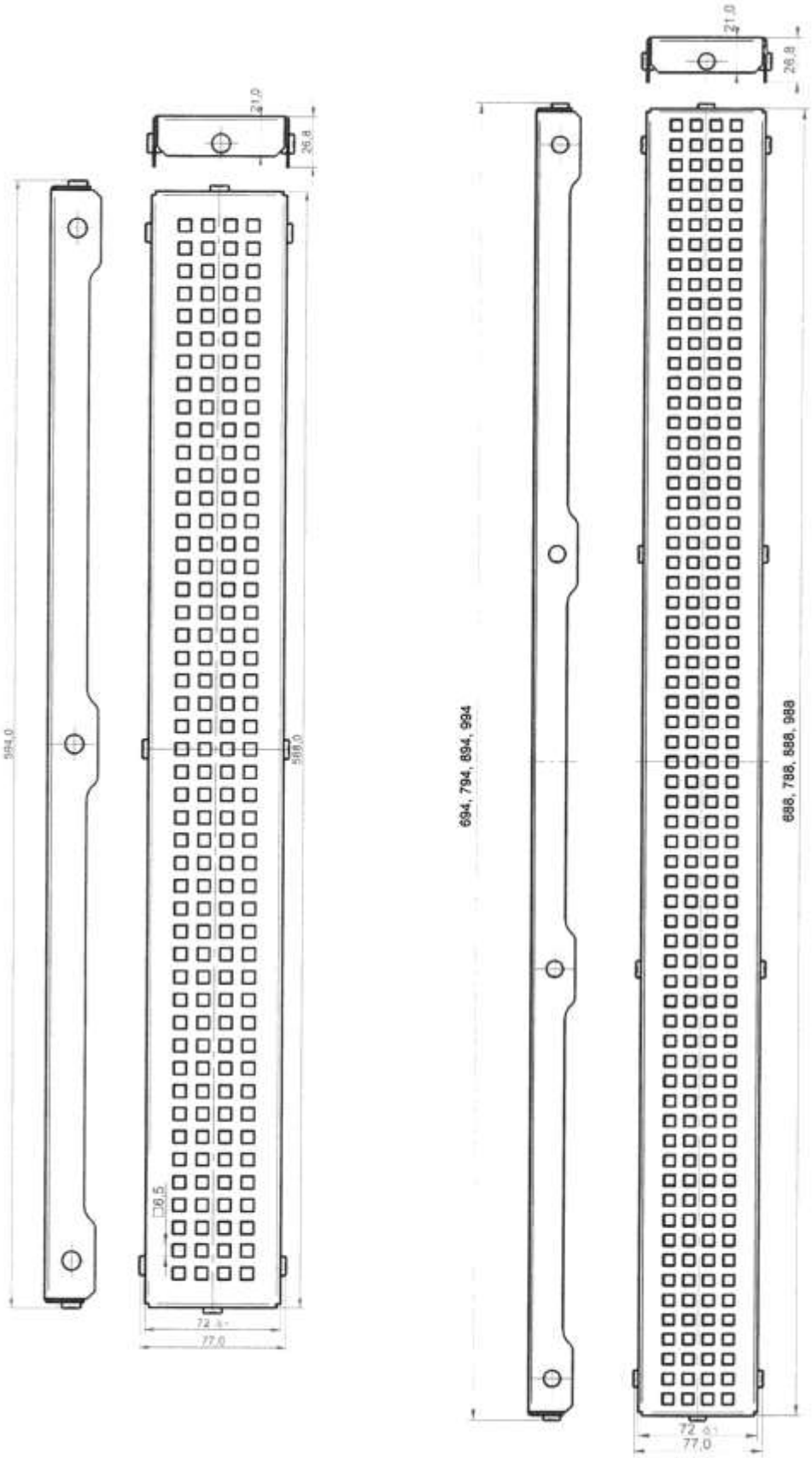

Fig. B13. CUBE grates for Aqua Ambient and Aqua Ambient Black Line linear inlets

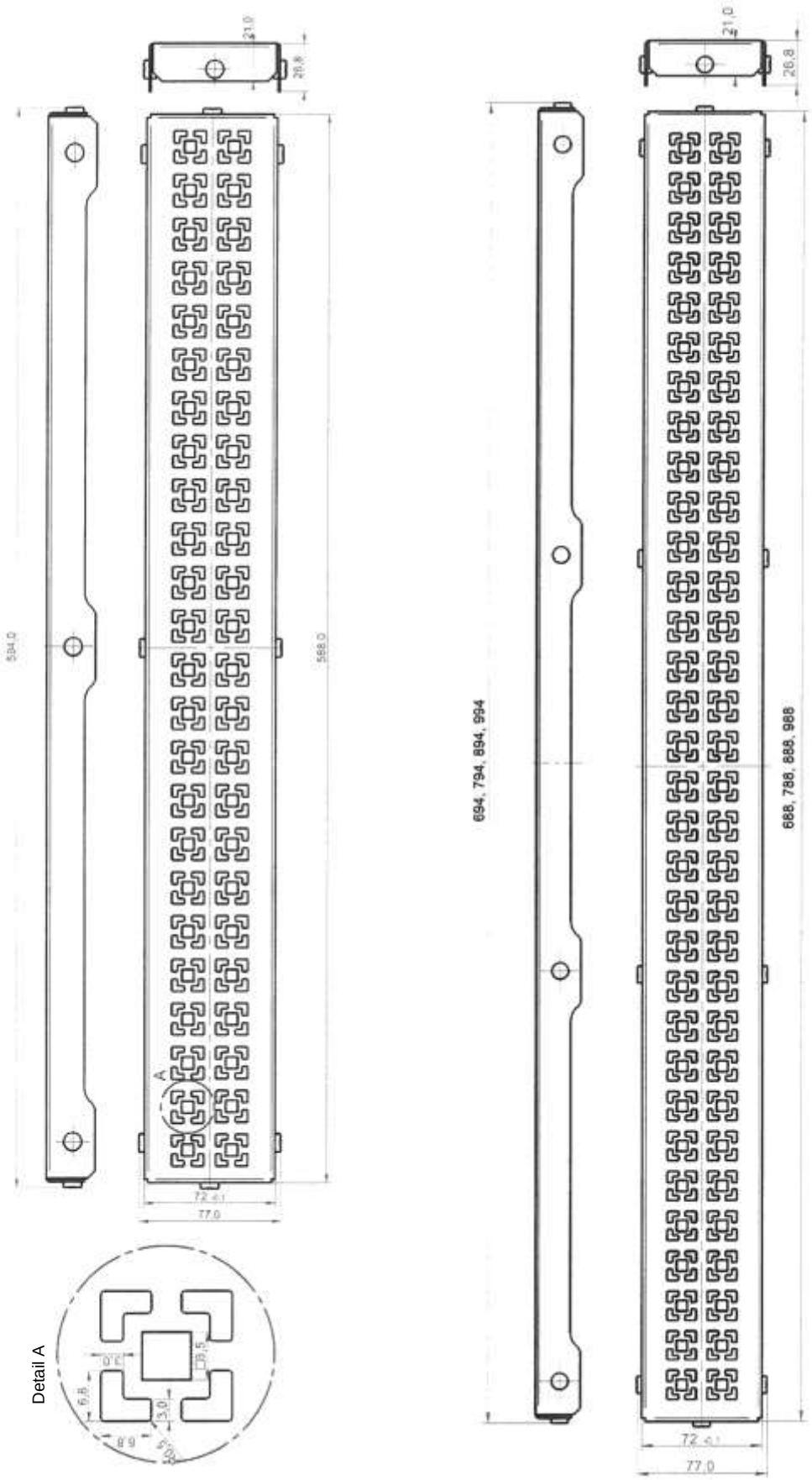

Fig. B14. ORIENT grates for Aqua Ambient and Aqua Ambient Black Line linear inlets

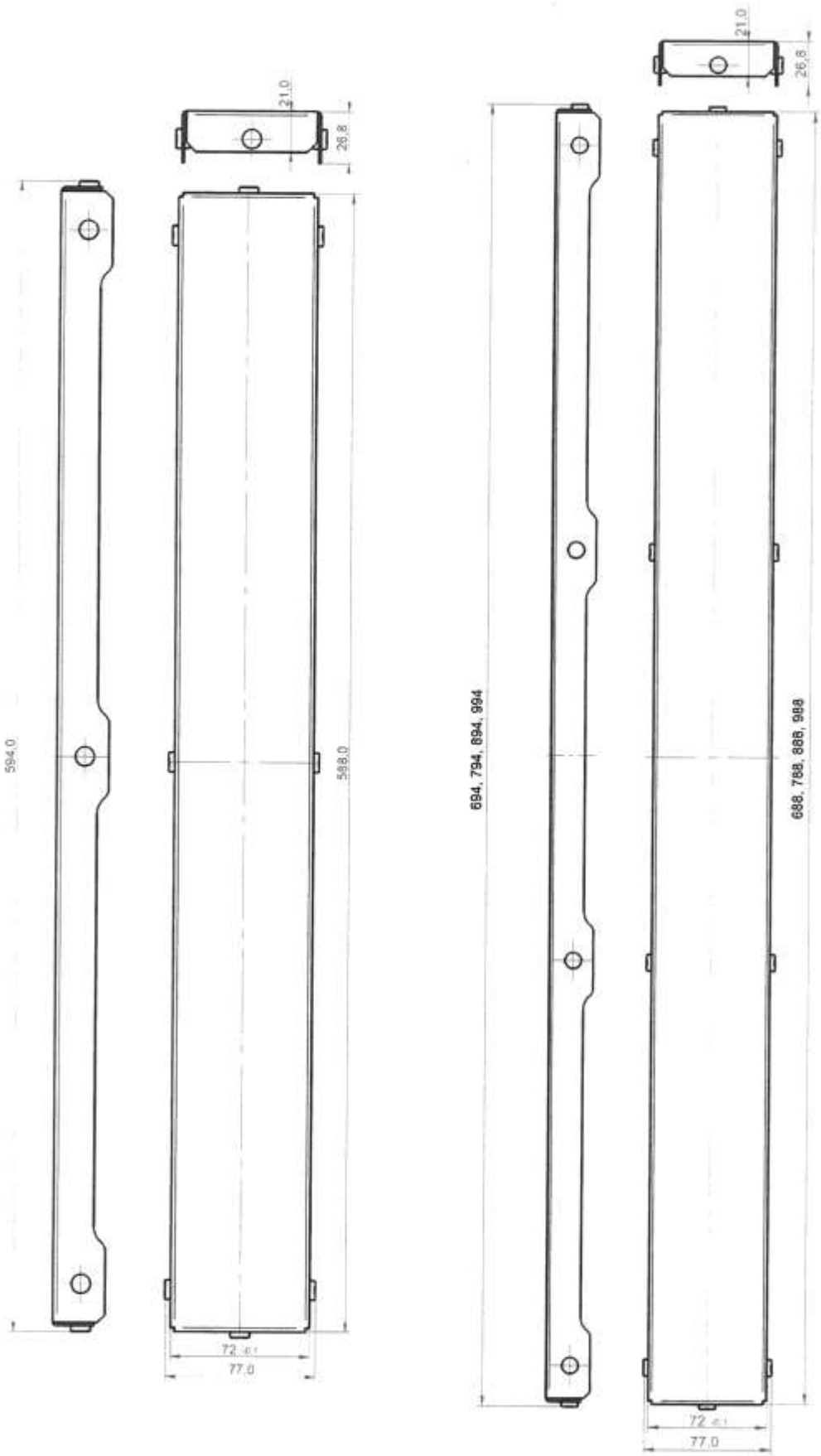

Fig. B15. PLAIN grates for Aqua Ambient and Aqua Ambient Black Line linear inlets

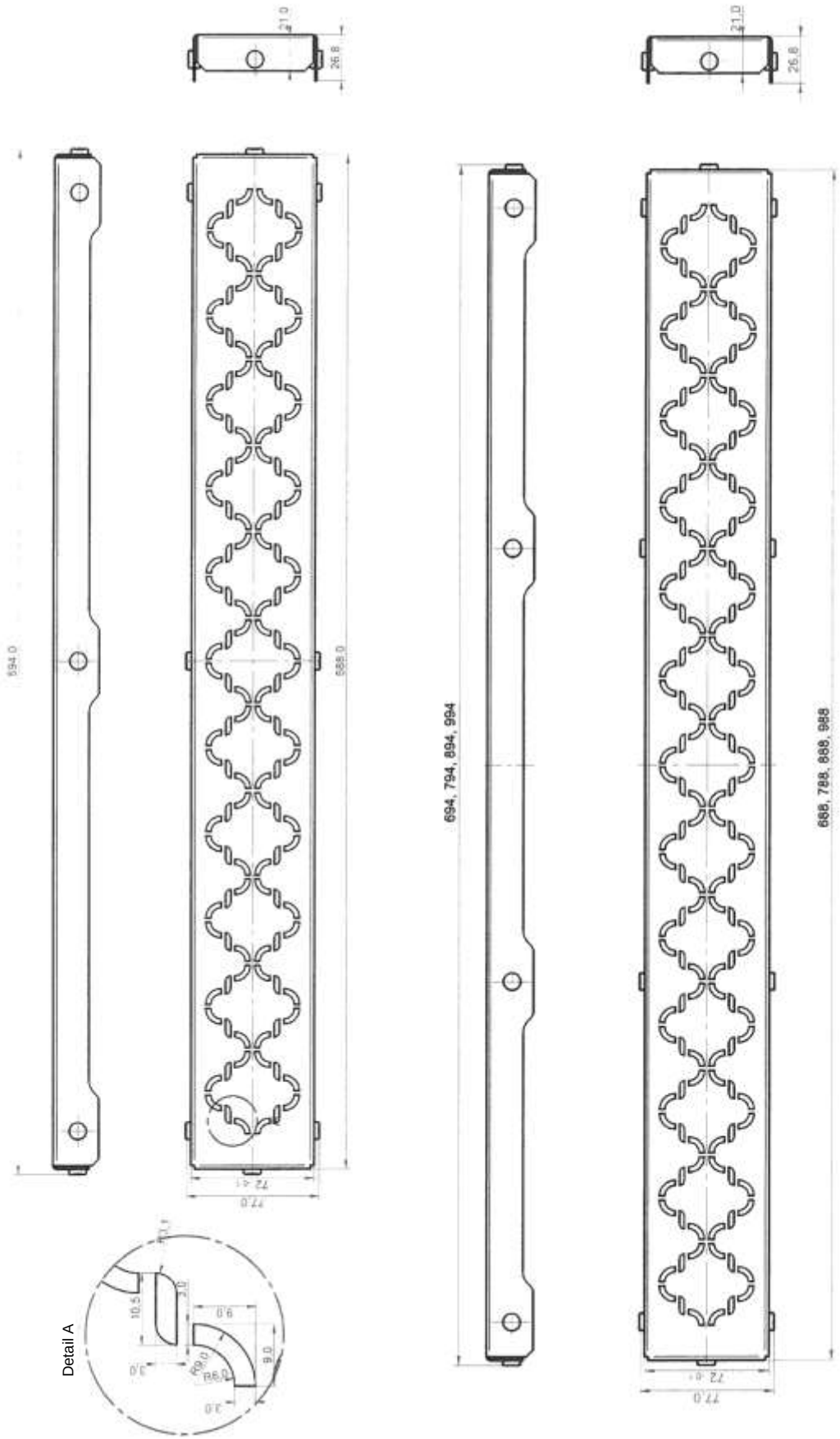

Fig. B16. MOROCCO grates for Aqua Ambient and Aqua Ambient Black Line linear inlets

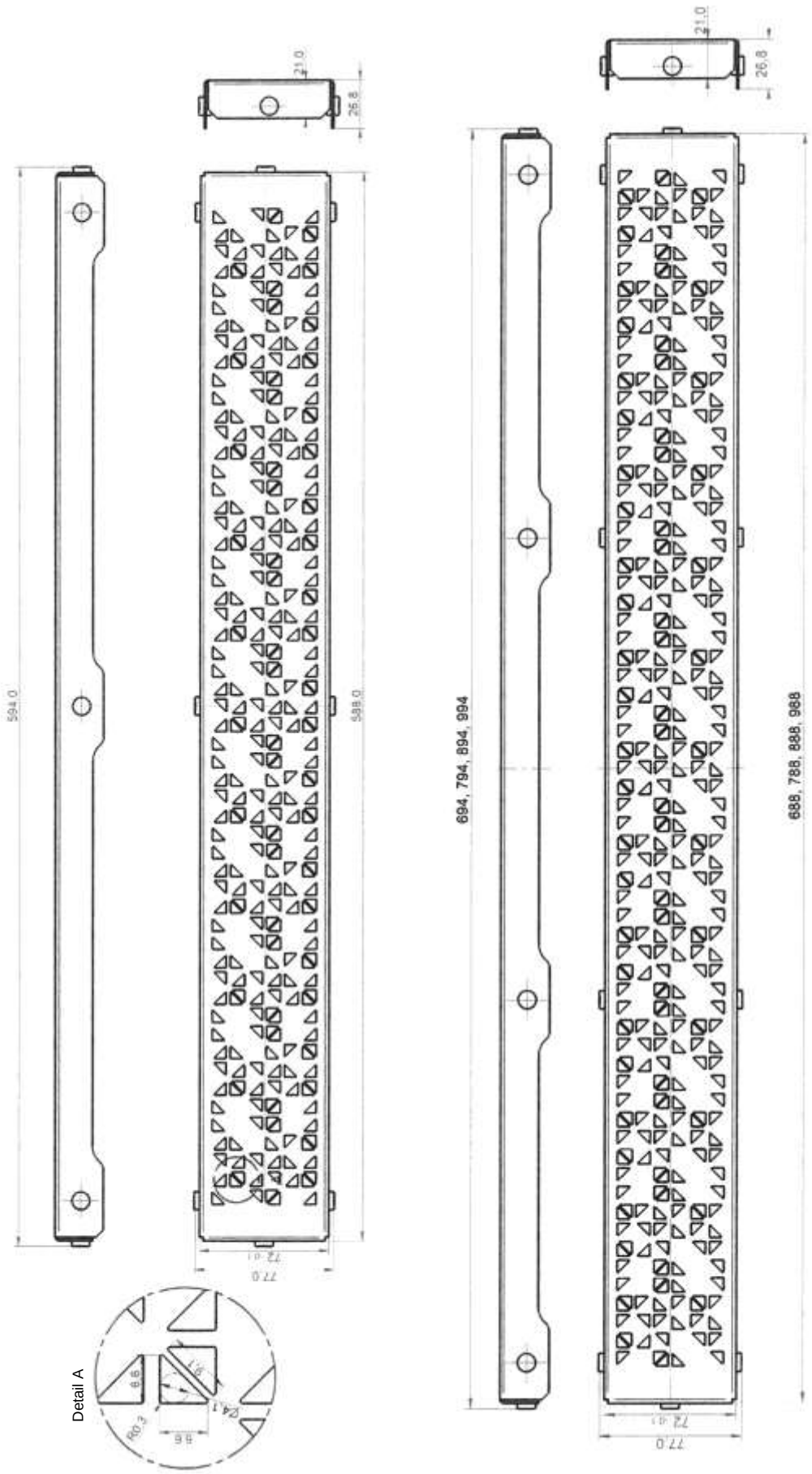

Fig. B17. MODERN grates for Aqua Ambient and Aqua Ambient Black Line linear inlets